GC Series F.R.L. combination

Symbol

No reflux valve is attached

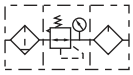

Reflux valve is attached

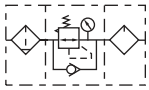

Product feature

1. Oil dripping adopts gap seal structure, which makes the adjustment of oil supply more reliable.
2. Oil feed ring can only make one full turn. The quantity of oil supply, basically taking on linear distribution. The quantity of oil supply can be generally calculated according to the position of graduation ring.
3. Filling of oil while the lubricator is under pressure is made possible.
4. Special drip nozzle structure will produce negative pressure in oil dripping outlet and the mist flow is minimal.
5. Quick and reliable mounting clamps makes it convenient to install and use.
6. The performance of pressure adjustment is reliable with high precision.
7. The efficiency of eliminating moisture and solid grain is high.
8. Three drain types are available: manual drain, semi-auto drain and automatic drain.

Specification

Model		GC200-06	GC200-08	GC300-08	GC300-10	GC300-15	GC400-10	GC400-15	GC600-20	GC600-25
Fluid		Air								
Port size [Note1]		1/8"	1/4"	1/4"	3/8"	1/2"	3/8"	1/2"	3/4"	1"
Filtering grade		40μm or 5μm								
Pressure range		Semi-auto and automatic drain:0.15~0.9MPa(20~130psi); Manual drain:0.05~0.9MPa(7~130psi)								
Max. pressure		1.0MPa(145psi)								
Proof pressure		1.5MPa(215psi)								
Temperature range		-5~70℃(Unfreeze)								
Capacity of drain bowl		10CC		40CC			80CC		230CC	
Capacity of oil bowl		25CC		75CC			160CC		380CC	
Recommended lubricant		ISO VG 32or equivalent								
Weight		580g		1300g			2360g		5550g	
Constitute	Filter	GF200-06	GF200-08	GF300-08	GF300-10	GF300-15	GF400-10	GF400-15	GF600-20	GF600-25
	Regulator	GR200-06	GR200-08	GR300-08	GR300-10	GR300-15	GR400-10	GR400-15	GR600-20	GR600-25
	Lubricator	GL200-06	GL200-08	GL300-08	GL300-10	GL300-15	GL400-10	GL400-15	GL600-20	GL600-25

[Note1] PT thread, G thread and NPT thread are available.

Ordering code

GC200 08 M L □ F 1 W G K

① ② ③ ④ ⑤ ⑥ ⑦ ⑧ ⑨ ⑩

①Model	②Port size	③Drain type	④Type code	⑤Pressure gauge	⑥Pressure gauge shape	⑦Scale	⑧Filtering grade	⑨Thread type	⑩Code of reflux valve [Note2]
GC200:G200 Series F.R.L unit	06: 1/8" 08: 1/4"	Blank: Semi-auto drain M: Manual drain	Blank: Standard L: Lower pressure [Note1]	Blank: Pressure gauge N: No pressure gauge	F: Square C: Circular	1: MPa 2: psi 3: bar	Blank: 40μm W: 5μm	Blank: PT G: G T: NPT	Blank: No reverse flow valve is attached K: Reverse flow valve is attached
GC300:G300 Series F.R.L unit	08: 1/4" 10: 3/8" 15: 1/2"	Blank: Semi-auto drain M: Manual drainA: Automatic drain							
GC400:G400 Series F.R.L unit	10: 3/8" 15: 1/2"								
GC600:G600 Series F.R.L unit	20: 3/4" 25: 1"								

[Note1] The maximum work pressure of lower pressure type is 0.4MPa(58psi); [Note2] Please refer to page 173 for details of reflux valve.

Inner structure

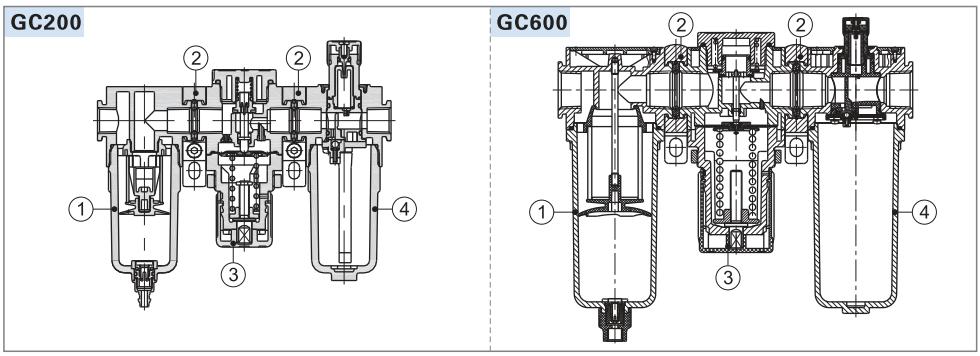

No.	Item	No.	Item
1	G series filter	3	G series regulator
2	Bracket	4	G series lubricator

GC Series F.R.L. combination

Pressure chart

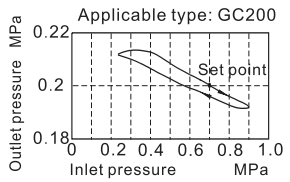

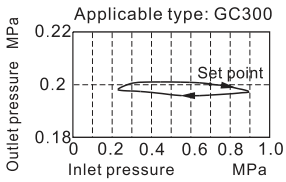

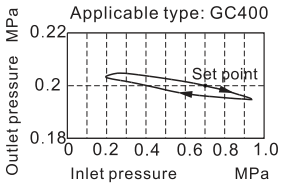

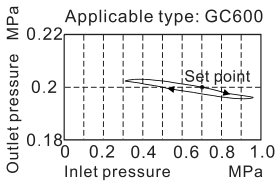

Flow chart

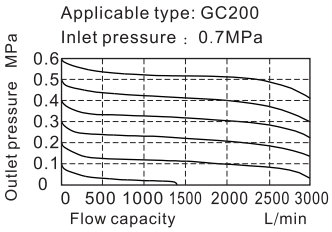

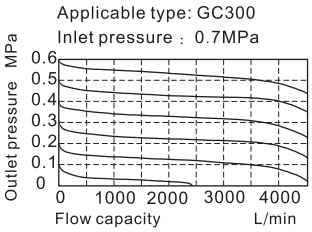

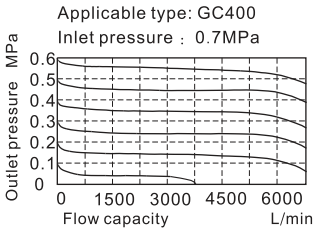

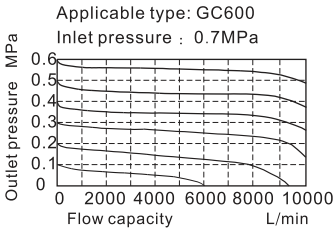

Dimensions

GC200

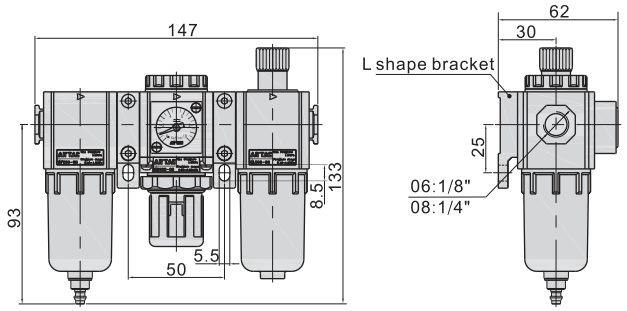

GC300\GC400

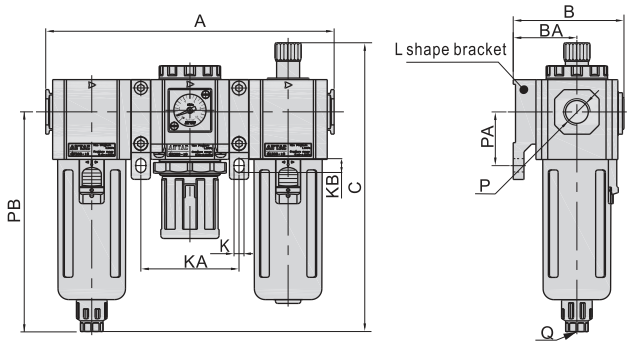

Model\Item	A	B	BA	C	K	KA	KB	P	PA	PB	Q
GC300-08	188	72	41.5	188	6.5	64	9	1/4"	35	143	G1/8
GC300-10	188	72	41.5	188	6.5	64	9	3/8"	35	143	G1/8
GC300-15	188	72	41.5	188	6.5	64	9	1/2"	35	143	G1/8
GC400-10	248	89	50	216	8.6	84	12	3/8"	40	166.5	G1/4
GC400-15	248	89	50	216	8.6	84	12	1/2"	40	166.5	G1/4
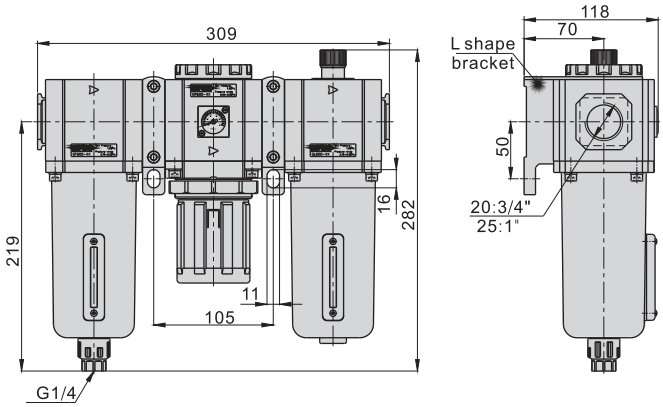
GC600